FILED
United States Court of Appeals
Tenth Circuit

August 20, 2018

Elisabeth A. Shumaker
Clerk of Court

PUBLISH

UNITED STATES COURT OF APPEALS

TENTH CIRCUIT

F & H COATINGS, LLC, Petitioner, v. R. ALEXANDER ACOSTA, Secretary of Labor; UNITED STATES DEPARTMENT OF LABOR, Respondents.	No. 17-9506

Petition for Review of a Final Order of the
Occupational Safety and Health Review Commission
(OSHRC Case No. 15-0558)

Gary W. Auman and Douglas Scott Jenks, Dunlevey, Mahan & Furry, Dayton, Ohio, for Petitioner.

Brian A. Broecker, Attorney (Nicholas C. Geale, Acting Solicitor of Labor, Ann S. Rosenthal, Associate Solicitor of Labor for Occupational Safety and Health, and Charles F. James, Counsel for Appellate Litigation, with him on the brief), United States Department of Labor, Washington, D.C., for Respondents.

Before **TYMKOVICH**, Chief Judge, **HARTZ**, and **HOLMES**, Circuit Judges.

HOLMES, Circuit Judge.

F & H Coatings, L.L.C. ("F & H") seeks review of a final order of the

Occupational Safety and Health Review Commission ("Commission"), and asks us to set aside a $7,000 penalty imposed by an administrative law judge ("ALJ"). The ALJ reviewed evidence presented by the Department of Labor ("DOL") during a two-day hearing, and held that the DOL had shown that F & H breached the General Duty Clause of the Occupational Safety and Health Act ("OSH Act"), 29 U.S.C. § 654(a)(1).

Upon review of the record, we conclude that the ALJ's findings are supported by substantial evidence, *see* 29 U.S.C. § 660(a), and therefore **affirm** the Commission's final order.

I

F & H is a commercial and industrial painting contractor. F & H contracted with Boardman L.L.C. ("Boardman"), a manufacturer of steel pressure vessels and tanks, to sandblast and paint a number of vessels at Boardman's manufacturing facility in Wichita, Kansas.

During the performance of this contract, a fatal accident at the Boardman facility took the life of Toney Losey, an employee of F & H. On September 23, 2014, Mr. Losey and his F & H supervisor, Robert Patrick, were preparing a 12,000 pound vessel for sandblasting when the vessel slipped from its support racks and crushed Mr. Losey. F & H characterizes this event as a "freakish, unforeseeable, and still-unexplained accident." Pet.'s Opening Br. at 3.

The vessel was about fifteen feet long and featured a number of irregular

protrusions—including, notably, a manway[1] weighing approximately 2,600 pounds. The vessel was elevated on a set of pipe racks[2] provided by F & H before it fell. Boardman positioned the vessel on the pipe racks with a crane.

Boardman did not use pipe racks while manufacturing the vessel. Instead, Boardman used "rollers," which, according to the ALJ, "cradle the vessel[] between two sets of wheels. . . . As compared to [the] pipe racks, the rollers maintained four points of contact with the vessel."[3] Pet.'s App. at 1002–03 (Decision & Order, dated Nov. 28, 2016) (citations and footnote omitted). F & H claims that it was impossible to place the vessel in question in the rollers once legs were attached to the vessel at the end of the manufacturing process.

Mr. Patrick testified that a vessel "couldn't be off-center" or "too far on one end" of the pipe racks, and that an unstable vessel would "probably fall." Pet.'s App. at 151–52, 159 (Tr. Hr'g, dated Mar. 29, 2016). To ensure that the vessel at issue was

---

[1] A manway is a reinforced and sealable opening with a protruding lip, large enough to allow an adult to access the interior of the tank.

[2] Pipe racks are saw-horse shaped supports made from metal pipes. The pipe racks used in this case were made of four-inch diameter steel pipe, and were approximately twelve feet long by twenty-seven inches high. The pipe racks also featured chains and pins at the ends of the cross beams, which were designed to prevent smaller-gauge pipes placed on the racks from rolling off during painting.

[3] Images of the vessel, the pipe racks, and the rollers—all of which the ALJ considered—are reproduced in an appendix to this opinion. Perhaps most notable, the pipe racks used to support the vessel appear in the images labeled R-4 and R-5 and the vessel itself appears in the image labeled R-7.

correctly placed on the pipe racks, Mr. Patrick performed a customary Pre-Work Job Hazard Analysis before the other F & H employees began working on the vessel. Mr. Patrick "visually check[ed] [the vessel] and then . . . purposely tr[ied] to move it" to ensure it was centered and stable on the pipe racks. *Id.* at 161. Mr. Patrick relied entirely upon his experience to assess whether the vessel was safely supported by the pipe racks, as he took no objective measurements.

Mr. Patrick and Mr. Losey then began preparing the vessel for sand-blasting. Mr. Losey leaned into the manway to hang lights inside the vessel, positioning his body halfway inside the vessel with his feet on the floor. Mr. Patrick testified that he heard a loud noise, saw the racks "flip up," and saw the vessel begin to roll off of the racks. *Id.* at 168–70. Mr. Losey was partly inside the vessel when it fell, and was crushed by its weight.

The Occupational Safety and Health Administration ("OSHA") learned of the accident the same day, and sent a Compliance Safety and Health Officer to inspect the scene. The OSHA officer also interviewed witnesses and employees of F & H and Boardman. Upon the officer's recommendation, OSHA issued a citation to F & H on March 17, 2015, for a violation of the General Duty Clause, 29 U.S.C. § 654(a)(l), because F & H's employee was "exposed to struck-by hazards in that the pressure vessel was not placed on a work rack which prevented unintentional movement." Pet.'s App. at 623 (Citation & Notification of Penalty, dated Mar. 17, 2015).

F & H filed a Notice of Contest on March 23, 2015, challenging "the substance of the citation alleged, the penalty assessed, and any abatement which might be required." *Id.* at 626 (Letter re. Notice of Contest, dated Mar. 23, 2015). The DOL then filed a complaint, seeking enforcement of the citation by the Commission. F & H responded to the complaint, denying substantially all of the DOL's allegations; it asserted twelve affirmative defenses, including, as relevant on appeal: (1) that the alleged conditions did not constitute a hazard; (2) that the alleged hazard was not recognized by the industry or by F & H; and (3) that F & H had no actual or constructive knowledge of the alleged hazard.

A two-day hearing was held before an ALJ on March 29 and 30, 2016. The ALJ heard extensive testimony from OSHA officials and individuals who were employees of F & H and Boardman at the time of the accident. The ALJ also reviewed photos of the accident scene. In addition, over F & H's objections, the ALJ permitted the DOL to introduce testimony by Brian Hope, an officer of a safety and health consulting company, as "an expert in safety procedures used to support tanks and vessels during blasting and painting." *Id.* at 462 (Tr. Hr.'g, dated Mar. 30, 2016). Among other things, Mr. Hope testified that other industrial painting companies do not use pipe racks like those used by F & H when working with tanks the size of the one that crushed Mr. Losey. Pipe racks would ordinarily be used "[t]o support . . . small gauge, lightweight material" weighing "less than . . . 2[,]000 pounds." *Id.* at 471–74. Mr. Hope testified that placing a 12,000

pound tank on pipe racks like those used by F & H would pose a hazard recognized by the industry of large-tank painters because the pipe racks would not prevent unintentional lateral movement. Based upon his "personal view and . . . experience" as well as the resting position of the fallen tank, Mr. Hope testified that the placement of the vertical supports and the fact that the crossbeams were rounded caused the pipe racks to "[v]eer[] up and . . . shoot[] out from underneath the tank," as the tank rolled off the vertical support, fell, and continued to roll over Mr. Losey. *Id.* at 476, 478–81.

Mr. Hope further testified that several feasible methods for preventing unintentional lateral movement of elevated tanks exist, including the use of rollers[4] or I-beam material stands.[5]

Approximately eight months after the hearing, the ALJ issued a written order, finding that the accident that killed Mr. Losey resulted from an obviously hazardous

---

[4] The ALJ described rollers as "a set of tires or wheels that are spaced apart such that a cylindrical object, such as a pressure vessel, can rest in between the tires and rotate. Due to the cradle orientation of the tires, there is no opportunity for lateral movement of the vessel." Pet.'s App. at 1016. Images of examples of such rollers are attached in the appendix to this opinion.

[5] Mr. Hope described I-beam stands as similar to pipe racks but constructed out of "8-inch wide . . . H-beams," and featuring additional "vertical supports . . . [that] would sit horizontal to the floor." Pet.'s App. at 466. I-beam stands also feature "flat steel or round disks that were wider than the I-beam itself[,] welded to the bottom" of the vertical supports to "prevent the side-to-side lateral movement of the [I-beam] stand in case it was . . . overloaded on one side." *Id.* at 466–67. Mr. Hope testified that I-beam stands were "designed to handle the load off[-]center . . . because . . . we would never want to . . . place someone in the position [where] they would have to dead[-]center an object on a stand in order for it to be able to support the material that it's trying to hold up." *Id.* at 469.

condition of which F & H was aware. The ALJ entered a decision and order on November 28, 2016, affirming the citation and the penalty of $7,000 assessed by OSHA. The full Commission declined to undertake discretionary review, and the ALJ's decision thereafter became the final decision of the Commission. *See Jake's Fireworks Inc. v. Acosta*, 893 F.3d 1248, 1252 (10th Cir. 2018); *Safeway, Inc. v. Occupational Safety & Health Review Comm'n*, 382 F.3d 1189, 1193 (10th Cir. 2004). F & H appealed directly to this court.

On appeal, F & H argues that the evidence did not support the ALJ's conclusion that F & H breached the General Duty Clause. F & H argues, in particular, that the placement of the pressure vessel on pipe racks did not constitute a hazardous condition, and that the occurrence of a "freakish and unforeseeable accident" is not evidence to the contrary. Pet.'s Opening Br. at 10. Further, F & H argues (1) that the DOL did not establish that either F & H or the industry recognized this condition as a hazard; (2) that the alleged hazard was likely to cause death or serious physical harm; or (3) that feasible means existed to abate the hazard.

F & H also argues that "Mr. Hope's testimony should have been excluded because he was not qualified to testify as an expert in this case, and because his opinions were untested, speculative, and, therefore, unreliable." *Id.* at 29.

II

This Court has jurisdiction to review decisions of the Commission pursuant to

§ 11(a) of the OSH Act, 29 U.S.C. § 660(a). *Universal Constr. Co. v. Occupational Safety & Health Review Comm'n*, 182 F.3d 726, 728 (10th Cir. 1999).

Our review of a final decision of the Commission is governed by 29 U.S.C. § 660(a), which "mandates that the 'findings of the Commission with respect to questions of fact, if supported by substantial evidence on the record considered as a whole, shall be conclusive.'" *Slingluff v. Occupational Safety & Health Review Comm'n*, 425 F.3d 861, 866 (10th Cir. 2005) (quoting *Interstate Erectors, Inc. v. Occupational Safety & Health Review Comm'n*, 74 F.3d 223, 226 (10th Cir. 1996) (quoting § 660(a))); *see also Tierdael Constr. Co. v. Occupational Safety & Health Review Comm'n*, 340 F.3d 1110, 1114 (10th Cir. 2003) ("This court reviews the Commission's findings of fact under a substantial evidence standard upon consideration of the record as a whole."). "Substantial evidence is such relevant evidence as a reasonable mind might accept as adequate to support a conclusion, and it must be enough to justify, if the trial were to a jury, a refusal to direct a verdict when the conclusion sought to be drawn from it is one of fact for the jury." *Slingluff*, 425 F.3d at 866 (quoting *Kent Nowlin Constr. Co. v. Occupational Safety & Health Review Comm'n*, 648 F.2d 1278, 1279 (10th Cir. 1981)). "As for factual findings, we do not reweigh the evidence, second-guess the factual inferences drawn therefrom, or substitute our judgment on the credibility of witnesses." *Jake's Fireworks Inc.*, 893 F.3d at 1257.

We will "affirm [the Commission's] legal conclusions unless they are arbitrary,

capricious, an abuse of discretion, or otherwise not in accordance with the law." *Safeway, Inc.*, 382 F.3d at 1192; *see also Jake's Fireworks Inc.*, 893 F.3d at 1257 ("Our review under this standard is narrow and highly deferential to the agency" (quoting *Compass Envtl., Inc. v. Occupational Safety & Health Review Comm'n*, 663 F.3d 1164, 1167 (10th Cir. 2011))).

Because the ALJ's order in this case became the final order of the Commission when the Commission declined to review it, we review the ALJ's order on appeal under the same standard of review as we would an order actually issued by the Commission. *Jake's Fireworks Inc.*, 893 F.3d at 1257 n.8; *Safeway, Inc.*, 382 F.3d at 1193.

We first address F & H's contention that the ALJ should not have admitted Mr. Hope's testimony as an expert on safety procedures used to support tanks and vessels during blasting and painting. We find no abuse of discretion in the ALJ's conclusion that Mr. Hope was qualified to offer such testimony or that his testimony was reliable. We next review the ALJ's conclusion that F & H violated the General Duty Clause. Finding substantial evidence to support the ALJ's factual findings, we affirm.

III

F & H argues on appeal that the ALJ erred by admitting Mr. Hope's testimony as that of an expert in violation of Federal Rule of Evidence 702 and *Daubert v. Merrell*

Dow Pharmaceuticals, Inc., 509 U.S. 579 (1993).[6]

Under Federal Rule of Evidence 702,[7] a tribunal may admit testimony from a

---

[6] The parties agree that the Federal Rules of Evidence applied in proceedings before the ALJ, and frame their arguments regarding the admission of Mr. Hope's expert testimony under the standards relevant to those rules. An OSHRC regulation provides that "[t]he Federal Rules of Evidence are applicable," 29 C.F.R. § 2200.71, in "all proceedings before the Commission and its Judges," 29 C.F.R. § 2200.2. It appears that this regulation supplants the more flexible evidentiary standards generally applicable to agency adjudication under the Administrative Procedures Act ("APA"), *see* 5 U.S.C. § 556(d). *Compare Richardson v. Perales*, 402 U.S. 389, 410 (1971) (discussing the allowance under the APA of hearsay evidence "up to the point of relevancy"); *Gallagher v. Nat'l Transp. Safety Bd.*, 953 F.2d 1214, 1218 (10th Cir. 1992) (noting that "[u]nder this [APA] standard, in order to be admissible for consideration in an administrative proceeding, the evidence need not be authenticated with the precision demanded by the Federal Rules of Evidence"), *with P. Gioioso & Sons, Inc. v. Occupational Safety & Health Review Comm'n*, 675 F.3d 66, 74 (1st Cir. 2012) (citing § 2200.71, and noting that the "Federal Rules of Evidence [are] applicable to [OSHA] ALJ hearings"); *Chao v. Gunite Corp.*, 442 F.3d 550, 558 (7th Cir. 2006) (same); *Am. Wrecking Corp. v. Sec'y of Labor*, 351 F.3d 1254, 1262 (D.C. Cir. 2003) (same). Although this circuit has not previously addressed whether a violation of the Federal Rules of Evidence requires reversal of an OSHRC decision pursuant to § 2200.71, we are content here to apply the Federal Rules of Evidence based upon a facial reading of the regulation and the parties' positions on the subject. We need not definitively decide, however, whether these rules or the APA's flexible evidentiary standards are controlling because Mr. Hope's testimony would have been admissible under either rubric. More specifically, as we hold *infra*, viewed through the prism of the Federal Rules of Evidence, the ALJ did not abuse his discretion in ruling that Mr. Hope's testimony was admissible. And, if Mr. Hope's testimony could satisfy the criteria of these evidentiary rules, it could necessarily satisfy the less stringent requirements of the APA's evidentiary standards.

[7] Rule 702 provides:

> A witness who is qualified as an expert by knowledge, skill, experience, training, or education may testify in the form of an opinion or otherwise if:
>
> (a) the expert's scientific, technical, or other specialized knowledge will help the trier of fact to understand the evidence or to determine a

qualified expert that is "relevan[t] and reliab[le]." *See Daubert*, 509 U.S. at 594–95. Under Rule 702, the tribunal must first decide whether the proferred expert is qualified "by knowledge, skill, experience, training, or education" to render an opinion. *See* FED. R. EVID. 702. "Second, if the expert is sufficiently qualified, the [tribunal] must determine whether the expert's opinion is reliable by assessing the underlying reasoning and methodology, as set forth in *Daubert*." *United States v. Nacchio*, 555 F.3d 1234, 1241 (10th Cir. 2009) (en banc). Where an expert testifies based on experience, the tribunal reviews the reliability of the testimony with reference to "the nature of the issue, the expert's particular expertise, and the subject of [the] testimony." *Kumho Tire Co., Ltd. v. Carmichael*, 526 U.S. 137, 148–50 (1999) (quoting the brief of the United States as amicus curiae). "[T]he method employed by the expert . . . [must be] scientifically sound and . . . the opinion [must be] based on facts which satisfy Rule 702's reliability requirements." *Dodge v. Cotter Corp.*, 328 F.3d 1212, 1222 (10th Cir. 2003).

Under Rule 702, we review a decision to admit or exclude expert testimony for abuse of discretion, and will find error only if the decision was "'arbitrary, capricious,

---

> fact in issue;
> (b) the testimony is based on sufficient facts or data;
> (c) the testimony is the product of reliable principles and methods; and
> (d) the expert has reliably applied the principles and methods to the facts of the case.

FED R. EVID. 702.

whimsical or manifestly unreasonable,' or 'we are convinced that the [tribunal] made a clear error of judgment or exceeded the bounds of permissible choice in the circumstances.'" *Nacchio*, 555 F.3d at 1241 (quoting *Dodge*, 328 F.3d at 1223).

Applying this standard under Rule 702, we find no abuse of discretion in the ALJ's determination that Mr. Hope was qualified to testify as an expert in "safety procedures used to support tanks and vessels during blasting and painting." Pet.'s App. at 462.

Mr. Hope testified that he was the vice president of a "national safety and health consulting company," and that his role involved "training, accident investigations, . . . inspections," and serving as an expert witness. *Id.* at 417–18. Mr. Hope holds a bachelor's degree in industrial risk and safety, and certifications as an Associate's Safety Professional and a Certified Safety Professional from the Board of Certified Safety Professionals. Mr. Hope testified that he was a certified crane operator and an advanced rigger; as such, he had expertise in the secure placement of heavy loads upon various support systems. Mr. Hope was also a member of the American Society of Safety Engineers (Kentucky Chapter), a past member of the Georgia Safety Health and Environmental Conference Advisory Board, and a former chairman of the Georgia Department of Labor Safety Award Committee and the Steel Tank Institute Steel Plate Fabricators Association Safety Committee.

The ALJ permitted F & H to subject Mr. Hope to voir dire examination to test his credentials. F & H clarified that Mr. Hope was not an engineer, and had never studied

mechanical or civil engineering. Moreover, Mr. Hope had no expertise with regard to the design or fabrication of pressure vessels.

The ALJ also questioned Mr. Hope about his experience and expertise. Mr. Hope testified to his "experience of working material stands" and his "experience with being able to understand the accident scene." *Id.* at 459. Mr. Hope testified that his responsibilities as a crane operator for sixteen years included "setting down [heavy] loads" upon various support systems. *Id.* at 460. In addition to his professional experience as a crane operator, Mr. Hope testified to his knowledge of industry standards, gleaned from performing audits of member companies of the professional organizations to which he belonged.

In light of this testimony regarding Mr. Hope's professional experience, certifications, and awareness of industry standards relating to the elevation and placement of heavy objects on various support structures in industrial settings, we find no abuse of discretion in the ALJ's decision that Mr. Hope was qualified to offer expert testimony.

Nor did the ALJ abuse his discretion in determining that Mr. Hope's testimony was based on reliable analytical methods under *Daubert.* To be sure, Mr. Hope was provided with only an engineering drawing and the approximate weight of the tank. And he had done no "calculations with regards to this case to determine the center of gravity of [the] vessel." *Id.* at 456. However, there were sufficient indicia of reliability for us to conclude that the ALJ did not abuse his discretion in admitting Mr. Hope's testimony.

When expert testimony is based on the experience of the expert, a tribunal determines the reliability of that testimony with reference to "the nature of the issue, the expert's particular expertise, and *the subject of* [*the*] *testimony*." *Kumho Tire Co., Ltd.*, 526 U.S. at 148–50 (emphasis added) (quoting the brief of the United States as amicus curiae). The ALJ would not have abused its discretion in effectively reasoning that, as to the general subjects as to which Mr. Hope testified, the reliability of his testimony was not significantly undercut by the fact that he had not considered the details regarding engineering specifications for the particular tank at issue or done "calculations with regards to this case to determine the center of gravity of [the] vessel." Pet.'s App. at 456. Notably, in this regard, Mr. Hope testified that other employers used alternate methods of support for similar vessels, including I-beams, which provide additional features to ensure that loads do not fall. And he also testified generally to the considerations that go into designing support systems, including the need to accommodate some human error in centering the weight of the load. Mr. Hope's experience and industry knowledge were sufficient for the ALJ to find that his expert conclusions with regard to these general subjects were reliable.

We will find error in the admission of expert testimony only if the tribunal's decision was "'arbitrary, capricious, whimsical or manifestly unreasonable,' or 'we are convinced that the district court made a clear error of judgment or exceeded the bounds of permissible choice in the circumstances.'" *Nacchio*, 555 F.3d at 1241 (quoting *Dodge*,

328 F.3d at 1223). The admission of Mr. Hope's testimony was not arbitrary or based on a clear error of judgment.

IV

Upon review of the evidence, we conclude that the record contains substantial evidence supporting the findings of the ALJ. We further conclude that the ALJ's determination that F & H violated the General Duty Clause was not arbitrary or an abuse of discretion. We deny F & H's petition for review, and affirm the decision of the Commission.

A

The General Duty Clause, § 654(a)(1) of the OSH Act provides: "Each employer [] shall furnish to each of his employees employment and a place of employment which are free from recognized hazards that are causing or are likely to cause death or serious physical harm to his employees." 29 U.S.C. § 654(a)(1).

"The Secretary [of Labor] has the burden of establishing a violation; the employer has no need to defend until a violation is established by evidence." *Austin Bldg. Co. v. Occupational Safety & Health Review Comm'n*, 647 F.2d 1063, 1069 (10th Cir. 1981). To establish a violation of the General Duty Clause, the Secretary of Labor must prove: "(1) that the employer failed to render its workplace free of an obvious and recognized hazard, (2) the hazard was causing or likely to cause death or serious physical harm, and (3) there was a feasible method by which the employer could have abated the hazard."

Safeway, Inc., 382 F.3d at 1195; *accord Baroid Div. of NL Indus., Inc. v. Occupational Safety & Health Review Comm'n*, 660 F.2d 439, 444 (10th Cir. 1981).

We review the evidence supporting the ALJ's findings with respect to each element of the offense in turn. We find substantial evidence supporting the ALJ's conclusion that each element was present here.

1

a

"A safety hazard at the worksite is a condition that creates or contributes to an increased risk that an event causing death or serious bodily harm to employees will occur." *Baroid Div. of NL Indus., Inc.*, 660 F.2d at 444. The Commission need not prove that a condition was the proximate cause of the specific accident in question to show that it was a hazardous condition:

> This is not a tort action designed to affix civil liability for injuries sustained in the accident. Rather, it is an action to determine whether certain safety regulations were violated and, if so, whether a [] fine is appropriate. The relevant inquiry is not the proximate cause of [a] particular accident but *the risk of accident or injury* as a result of the alleged violations and the seriousness of the potential injuries.

Dye Constr. Co. v. Occupational Safety & Health Review Comm'n, 698 F.2d 423, 426 (10th Cir. 1983) (emphasis added); *cf. Jake's Fireworks Inc.*, 893 F.3d at 1259 ("The ALJ found that Jake's violated the [explosives regulatory] standard because its storage and handling of fireworks at the Old Facility were an undue hazard. . . . The resulting fire was probative that Jake's storage and handling of fireworks was in fact a hazard." (citations

omitted)).

Here, the ALJ determined that the placement of the vessel on the pipe racks constituted a hazard. "At its most basic, the condition involved elevating an incredibly heavy object, placing it on a set of racks, allowing work to be performed on it" "without securing it against unexpected movement." Pet.'s App. at 1006 (citations omitted). The likelihood of the vessel falling was exacerbated by the uneven weight of the protruding manway, and the placement of the vessel "on rounded crossbeams, which meant that the point of contact between the cylindrical body of the vessel and the cylindrical crossbeam was quite small."[8] *Id.*

In reaching this conclusion, the ALJ relied upon testimony: (1) by F & H's Safety Director, Mike Emmett, and by the city police officer who responded to the accident regarding the dimensions of the vessel; (2) by the OSHA investigator regarding the dimensions of the pipe racks; and (3) by Mr. Patrick, the F & H supervisor, regarding the orientation of the vessel in the pipe stands. The ALJ also reviewed photographs of the vessel and the pipe racks. The ALJ inferred from this evidence that placing the vessel on

---

[8] F & H argues that the ALJ incorrectly characterized the vessel as "cylindrical" because it featured four square legs that lay "flat on the pipe rack." Pet.'s Opening Br. at 14–15. The ALJ recognized that the legs created a flat surface against the pipe rack supporting one end of the vessel. The ALJ's conclusions did not rest upon an assumption of a perfectly cylindrical shape, however, but upon the convex shape of one end of the vessel against the convex shape of the pipe rack's crossbeam. Thus, F & H's argument that the ALJ's common-sense inference rested upon a faulty assumption (that the vessel was perfectly cylindrical) misinterprets the factual basis for the inference.

the pipe racks created a risk of accident and injury because the vessel was likely to fall.

The ALJ took into consideration Mr. Patrick's testimony that he had "assessed whether the vessel was placed 'dead center' of the crossbeams by looking at it and made sure it would not move by pushing on it." *Id.* at 1006–07. Mr. Patrick testified that the angled legs of the vessel would ensure it did not roll along the pipe racks. The ALJ discounted Mr. Patrick's conclusion that the vessel was stable, however, noting Mr. Patrick's further testimony that he relied solely upon his experience to assess the stability of the vessel's position, but had never personally observed an improperly placed vessel. "The placement of a six-ton, cylindrical object on top of round metal pipes, with only visual observation and a shove to ensure stability, certainly increased the risk of serious harm to those employees assigned to perform work on the elevated object." *Id.* at 1008. In light of the foregoing, we have little difficulty concluding that the ALJ's determination was based on substantial evidence.

In *Safeway, Inc.*, for example, this court relied, in part, upon the physical characteristics of a gas tank and a grill to affirm the Commission's finding, under the General Duty Clause, that the use of a forty-pound tank with a grill designed for a twenty-pound tank created a hazard; but these physical characteristics were not the exclusive grounds for the court's decision. *See* 382 F.3d at 1195. Furthermore, the DOL cites two cases in which the Eighth Circuit held that physical characteristics of a hazard were sufficient to support a finding of hazard: in *McKie Ford, Inc. v. Secretary of Labor*,

the Eight Circuit affirmed a Commission finding that an elevator without a door, which was controlled by an apparatus outside of the elevator, constituted a hazard based upon those characteristics and common sense, 191 F.3d 853, 855–56 (8th Cir. 1999); and in *Donovan v. Missouri Farmers Ass'n*, the Eighth Circuit reversed a Commission decision in favor of an employer, finding that lowering an employee into a confined space without a safety belt or lifeline created an "obvious [hazard] even in the absence of expert opinion," 674 F.2d 690, 693 (8th Cir. 1982).

The physical characteristics of the pipe racks and the vessel, moreover, were not the only evidence relied upon by the ALJ to conclude that the placement of the vessel on the racks created a hazard, as noted above. The ALJ also weighed the evidence of Mr. Patrick's inspection and his testimony that an incorrectly placed vessel might roll to find that a hazard existed.[9] F & H urges the court to instead take Mr. Patrick's inspection as evidence that there was no hazard, but "[w]e do not sit as a super trial examiner" on review of the Commission's decision, *Slingluff*, 425 F.3d at 868 (quoting *Ready Mixed*

---

[9] Although in the context of reviewing a violation of a specific regulation governing the storage and handling of explosives, the reasoning of our recent decision, *Jake's Fireworks Inc.*, is instructive. There, we approved a finding of an "explosion hazard which presented an undue hazard to life" based upon the storage of damaged fireworks in cracked containers in a derelict facility, where explosive powder and grass had accumulated on the floor. 893 F.3d at 1257 (quoting Jake's Fireworks, Inc., 26 BNA OSHC 1738, 2017 WL 2501140, at *11 (No. 15-0260, 2017)). The court accepted the ALJ's reliance upon testimony by a Commission officer and a fire investigator as to the physical conditions at the facility and the witnesses' analysis in concluding that the conditions constituted an undue hazard. *Id.* at 1259 & n.12.

Concrete Co. v. Nat'l Labor Relations Bd., 81 F.3d 1546, 1551 (10th Cir. 1996)), nor do we "reweigh the evidence[or] second-guess the factual inferences drawn therefrom," *Jake's Fireworks Inc.*, 893 F.3d at 1257.

b

The presence of a hazard gives rise to a violation of the General Duty Clause only if that hazard was "recognized" either by the employer or by the industry, or was so obvious as to put the employer on constructive notice. *See Safeway, Inc.*, 382 F.3d at 1195 & n.4; *Austin Bldg. Co.*, 647 F.2d at 1067. "Whether a condition at the worksite constitutes a 'recognized hazard' is a question of fact as to which the findings of the Commission that are supported by substantial evidence on the record are conclusive." *Baroid Div. of NL Indus., Inc.*, 660 F.2d at 446; *accord Dep't of Labor v. Occupational Safety & Health Review Comm'n*, 938 F.2d 1116, 1117–18 (10th Cir. 1991).

The ALJ concluded that the hazard was obvious and, moreover, that F & H recognized the hazard. The ALJ noted the obviousness of the "increased risk" created by "placing an awkwardly shaped, incredibly heavy object on elevated crossbeams" as evidence of hazard recognition. Pet.'s App. at 1010. The ALJ further noted that:

> [The pipe racks featured] chains and pins . . . . attached to the end of the pipe racks . . . to prevent smaller-gauge pipe . . . from rolling off . . . . Although the risk of injury was significantly reduced when sandblasting or painting smaller diameter pipe, the recognized hazard is still the same: round objects placed on convex, round surfaces have a tendency to move.

Id. at 1011 (footnote and citations to the record omitted).

The ALJ also took Mr. Patrick's visual inspection and his assertion that the vessel needed to be "dead center" on the pipe racks as evidence that F & H recognized the hazard presented by an improperly placed vessel.[10] While the ALJ recognized that "an employer's safety precautions alone do not establish that the employer believed that those precautions were necessary," the Commission considers that precautions "can be used to establish hazard recognition in conjunction with other evidence." Beverly Enters., Inc., 19 BNA OSHC 1161, 2000 WL 34012177, at *28 (Nos. 91-3144 *et al.*, 2000).[11]

To be sure, in its decision and order, the ALJ did not refer to Mr. Emmett's testimony that other companies in the industry place similar vessels on pipe racks without incident, and that industry associations do not recognize the hazard. But the ALJ did not

---

[10] "[T]he actual or constructive knowledge of a foreman . . . can be imputed to the employer." *Jake's Fireworks Inc.*, 893 F.3d at 1260 (omission in original) (quoting Tampa Shipyards, Inc., 15 BNA OSHC 1533, 1992 WL 52938, at *6 (Nos. 86-360 & 86-469, 1992)).

[11] In a brief paragraph in its opening brief, F & H objects to the ALJ's reliance upon Mr. Patrick's pre-work inspection as evidence of hazard recognition, arguing that allowing such evidence "would . . . discourage employers from conducting" safety checks. Pet.'s Opening Br. at 20. F & H apparently raises this objection for the first time in this petition, offers no authority to support the position, and does not repeat it. We note support for the ALJ's use of this evidence in administrative decisions of the Commission, *see* Beverly Enters., Inc., 2000 WL 34012177, at *28; Waldon Health Care Ctr., 16 BNA OSHC 1052, 1993 WL 119662, at *12 (Nos. 89-2804 & 89-3097, 1993); Trinity Indus., Inc., 15 BNA OSHC 1481, 1992 WL 24122, at *5 n.8 (No. 88-2691, 1992), but we apparently have not definitively opined on the issue. And we need not do so here. F & H's late-blooming, skeletal argument is inadequately developed to warrant review. Consequently, we deem the ALJ's approach without meaningful challenge in this case and, for purposes of resolving this dispute, consider it appropriate to factor into the substantial-evidence analysis the evidence of Mr. Patrick's inspection. We leave for another day the ultimate resolution of this legal issue.

abuse his discretion by focusing the inquiry upon F & H's recognition of the hazard and the obviousness of the hazard to it, rather than whether the condition was recognized as hazardous by the industry overall. *See Safeway, Inc.*, 382 F.3d at 1195 n.4 ("[An employer] cannot ignore the presence of an obviously hazardous condition by asserting that its industry is ignorant of such hazards."); *cf. Jake's Fireworks Inc.*, 893 F.3d at 1260 ("Mr. Moutz, a Jake's supervisor, testified that, before the fire occurred, he had an opportunity to observe the contents of the container that [the injured Jake's employees] worked in on the day of the fire. It is reasonable to infer that he saw the damaged fireworks, debris, and vegetation before the fire and possessed actual knowledge of the hazardous circumstances. . . . This testimony [*inter alia*] showed Jake's knew or should have known the Old Facility [where the fire occurred] was not safe.").

F & H claims that the hazard was not obvious, and, in fact, that the direct cause of this "freakish and unforeseeable accident" remains unexplained. Pet.'s Opening Br. at 10, 13. As the ALJ recognized, however, "[w]hile no definitive answer was given as to how the vessel came off the racks, [the DOL] does not have to prove the cause of a particular accident in order to establish that a condition violated the [OSH] Act." Pet.'s App. at 1008. "The relevant inquiry is not the proximate cause of [a] particular accident but the risk of accident or injury as a result of the alleged violations and the seriousness of the potential injuries." *Dye Constr. Co.*, 698 F.2d at 426. "[W]hether the vessel rolled, slipped, or slid off the racks" is irrelevant, because the DOL is required to show only that

the condition "contributes to an increased risk" of injury or death. Pet.'s App. at 1008 (quoting *Baroid Div. of NL Indus., Inc.*, 660 F.2d at 444); *cf. Jake's Fireworks Inc.*, 893 F.3d at 1260 (to establish a violation of a specific regulation, "the Secretary . . . must show only that the employer was aware that 'the physical conditions that constitute a violation' existed" (quoting Boh Bros. Constr. Co., 24 BNA OSHC 1067, 2013 WL 949386, at *8 (No. 09-1072, 2013))).

F & H argues, further, that it did not in fact recognize the hazard, citing Mr. Patrick's conclusion, after his inspection, that the pressure vessel was correctly placed, and testimony by Boardman employees that they noticed no indication that the pressure vessel would fall. While F & H's arguments convey that it provided evidence conflicting with the DOL's evidentiary narrative, "[w]e do not sit as a super trial examiner [on review of the Commission's decision], and do not weigh the credibility of one witness against another, nor do we search for contradictory inferences." *Slingluff*, 425 F.3d at 868 (quoting *Ready Mixed Concrete Co.*, 81 F.3d at 1551); *accord Jake's Fireworks Inc.*, 893 F.3d at 1257. The ALJ's factual finding that F & H recognized the obvious hazard created by placing the vessel on the pipe racks is supported by substantial evidence, and is, therefore, conclusive. *See Baroid Div. of NL Indus., Inc.*, 660 F.2d at 446.

2

The ALJ further found that the hazard was likely to cause death or serious physical harm, relying upon the facts of this case and Mr. Losey's death, as well as the weight of

the vessel and the "rounded, elevated" character of the pipe-rack crossbeam. Pet.'s App. at 1014. In *Dye Construction Co.*, we approved similar reliance upon the facts of the accident giving rise to the citation as evidence of the seriousness of the hazard. 698 F.2d at 426 ("[T]he employee's injuries attest to the seriousness of the potential harm."). The fact of Mr. Losey's death combined with the physical characteristics of the vessel provide substantial evidence supporting the factual finding of the ALJ that placement of the vessel on the pipe racks was likely to result in death or serious injury.

3

The Commission also bears the burden of proving the "availability of feasible measures that would have significantly reduced the likelihood of the accident." *Marshall v. Cities Serv. Oil Co.*, 577 F.2d 126, 133 (10th Cir. 1978) (Holloway, J., dissenting); *accord Safeway, Inc.*, 382 F.3d at 1195. "'[F]easible' for purposes of [the OSH Act] means economically and technologically capable of being done." *Baroid Div. of NL Indus., Inc.*, 660 F.2d at 447 (citing *Am. Textile Mfrs. Inst., Inc. v. Donovan*, 452 U.S. 490, 509 (1981)).

The ALJ concluded that a feasible and effective means existed to materially reduce the hazard. The ALJ found that using rollers to support the vessel, as Boardman had done during fabrication, would be one feasible means of abating the hazard. In this regard, the ALJ heard testimony from Mr. Emmett, F & H's Safety Director, and others from which it could reasonably find that F & H and other contractors had successfully used rollers to

secure large pressure vessels when working on site at Boardman. The ALJ discounted Mr. Patrick's testimony that the rollers sat too close to the ground for painting, and credited testimony of Boardman's employee, Max McMillan, that the vessel had been manufactured "almost entirely" while supported by rollers, including while the angled legs were welded into place. Pet.'s App. at 1016–17. Mr. McMillan, who was involved in the entirety of the fabrication process, testified that the rollers could support the vessel when they were positioned "in front of the legs," and Keith Farish, another Boardman employee, testified that the vessel could be partly rotated with the legs attached. *Id.* at 350–51, 394–95, 400–01.

The ALJ recognized that "rotating the vessel bec[ame] more difficult with each additional valve, but . . . the crane could be used to assist in the rotation." *Id.* at 1017. The vessel would need to be repositioned to complete touch-up painting, regardless of whether rollers or pipe racks were used. While use of rollers might require more frequent repositioning than use of pipe racks, the ALJ found that "just because an additional step or two is required does not mean that a particular course of action is infeasible." *Id.*

The ALJ weighed conflicting testimony and found that the rollers presented a feasible means of abating the hazard. "[C]redibility determinations are particularly the province of the ALJ. . . . We refuse to substitute our judgment on the credibility of witnesses for that of the ALJ, absent extraordinary circumstances." *Slingluff*, 425 F.3d at 868 (omission in original) (quoting *Ready Mixed Concrete Co.*, 81 F.3d at 1551).

Furthermore, the ALJ relied on Mr. Hope's testimony that F & H "could have implemented any number of alternatives for supporting the vessel while sandblasting and coating," including rollers and I-beams. Pet.'s App. at 1018. In particular, as to the latter, "[Mr.] Hope testified that another employer used a rack constructed out of I-beams, similar to those available at Boardman." *Id.* The ALJ noted safety features of I-beam supports "designed to prevent both movement of the vessel/tank and to prevent movement of the racks themselves," including "vertical members [welded] to the ends of the crossbeam" and "round, steel discs, which were attached to the bottom of the stands to stabilize the racks." *Id.* at 1018–19. We have already held that the ALJ did not abuse his discretion by admitting this testimony by Mr. Hope; we now find that this testimony, combined with the other evidence in the record, provides substantial evidence to support the ALJ's conclusion that alternate—and safer—means of supporting the vessel were available.

V

Based on the foregoing, we conclude that the judgment of the Commission is supported by substantial evidence. F & H's petition for review is **DENIED** and the order of the Commission is **AFFIRMED**.

APPENDIX

Appellate Case: 17-9506 Document: 01019826577 Date Filed: 06/16/2017 Page: 566
OSHRC Docket No. 15-0558
Exhibit R-7, Page 1 of 1
EXHIBIT
R-7

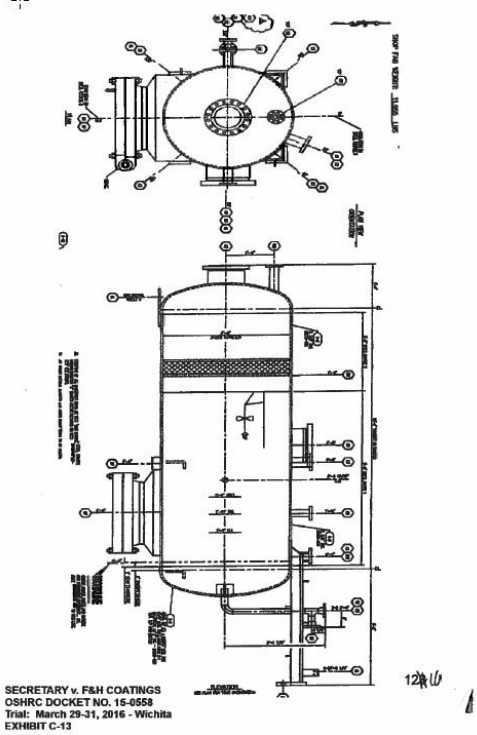
SECRETARY v. F&H COATINGS
OSHRC DOCKET NO. 15-0558
Trial: March 29-31, 2016 - Wichita
EXHIBIT C-13

Appellate Case: 17-9506 Document: 01019826577 Date Filed: 06/16/2017 Page: 592

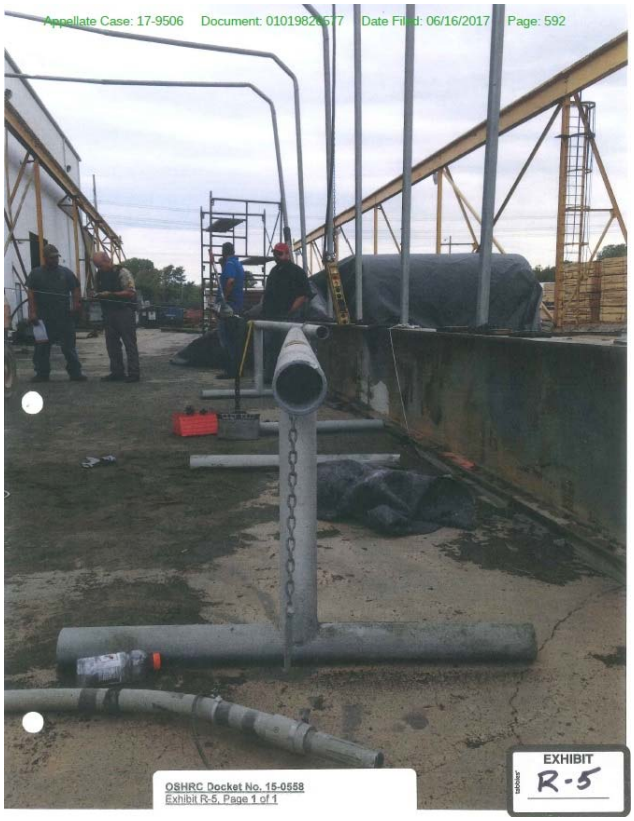

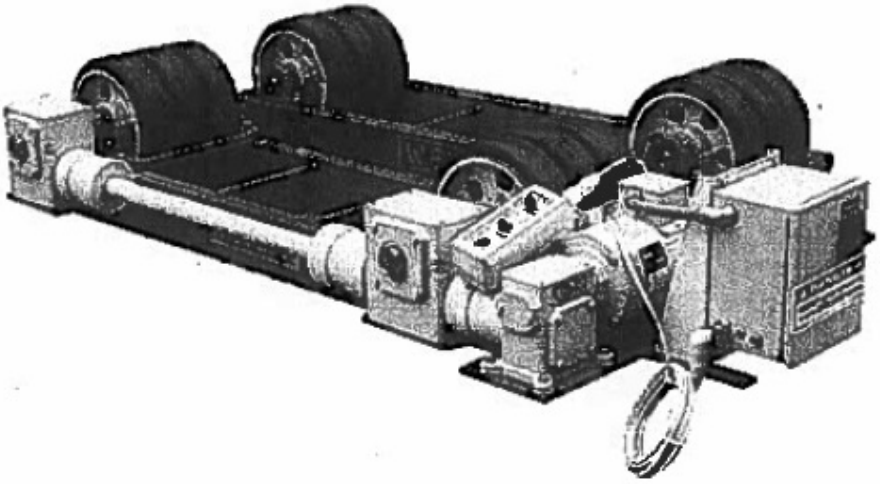

Webb
TWS-123 12,000 lb
Tank Turning Roll

800-288-9414

WELD PLUS
WELDING SOLUTIONS INC.®

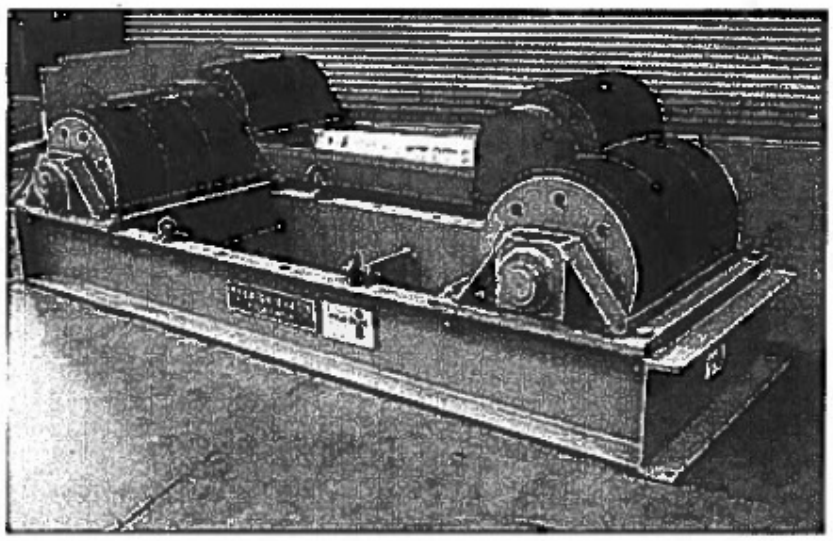

Preston-Eastin
120 Ton Turning Rolls

800-288-9414
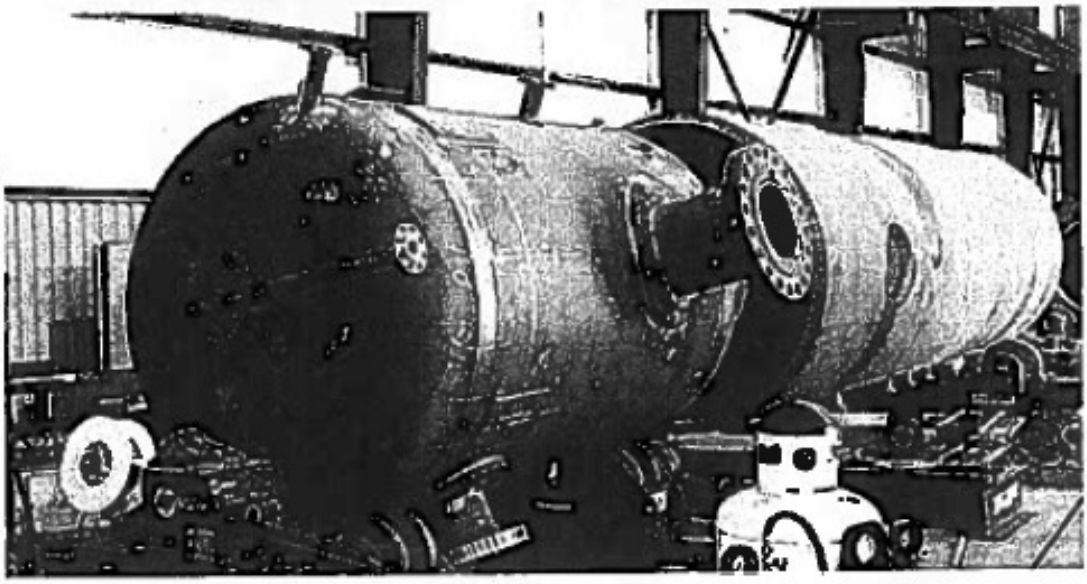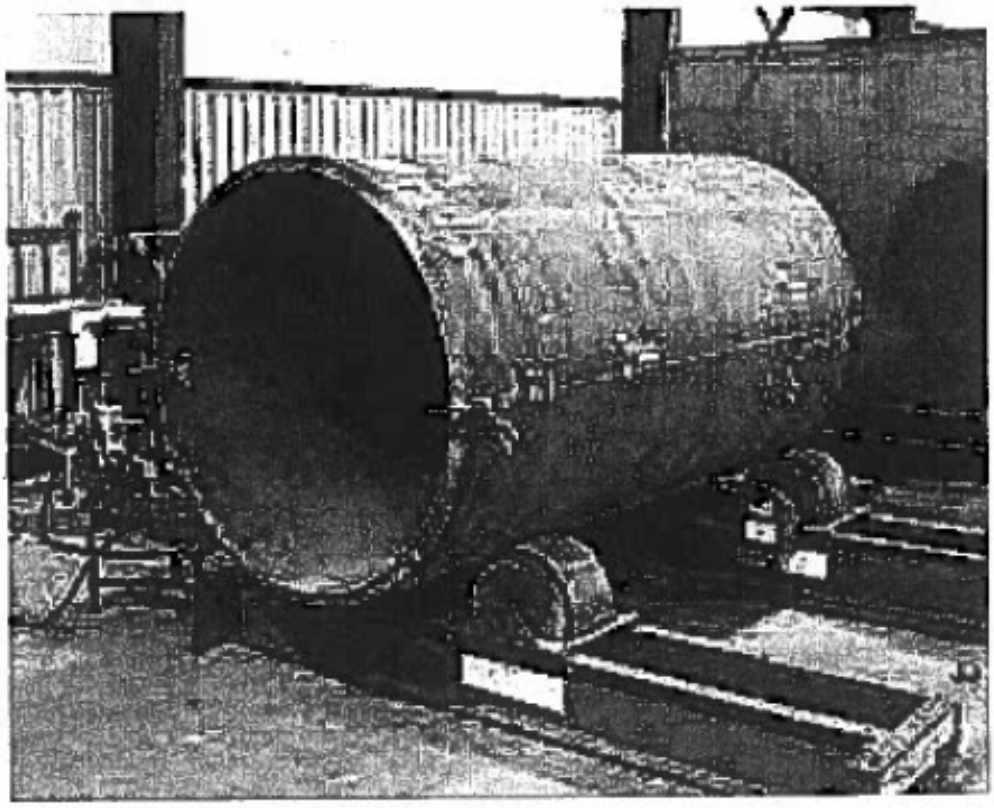
WELD PLUS
WELDING SOLUTIONS INC.®